Functional Devices, Inc.
Lighting Controls

Functional Devices, Inc.
101 Commerce Drive
Sharpsville, IN 46068

Toll Free: (800) 888-5538
Office: (765) 883-5538
Fax: (765) 883-7505

Email: sales@functionaldevices.com
Website: www.functionaldevices.com

ESRBE01C

Enclosed Relay 1 0 Amp SPST-NC with 120 Vac Coil and Switched Utility Detection

UL924 EMERGENCY BYPASS / SHUNT RELAY

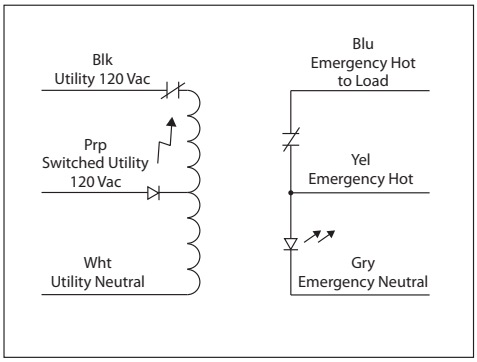

• Ballast Size Housing

LISTED

RoHS

MADE IN THE U.S.A.

Specifications

 # Relays & Contact Type: One (1) SPST-NC Continuous Duty Coil
Expected Relay Life: 10 million cycles minimum mechanical
Operating Temperature: -30 to 140° F
Operate Time: 50 ms
Relay Status: Red LED On = Activated
Emergency Power Present: Yellow LED On = Transfer Power Present
Dimensions: 4.60″ x 1.20″ x 1.70″
Wires: 16.00″, 600V Rated
Approvals: UL Listed, UL924, C-UL, CE, RoHS
Gold Flash: No

Contact Ratings:
10 Amp Magnetic Ballast @ 277 Vac (N/C)
2 Amp Electronic Ballast @ 120 Vac (N/C)

Coil Current:
100 mA @ 120 Vac

Coil Voltage Input:
120 Vac ; 50-60 Hz

Notes:
- Control input on purple wire detects wall switch, allowing emergency light to be used as normal lighting.
- Smaller design to fit inside ballast housing of fluorescent light fixture.

Initial Wiring Verification

1. Turn OFF Normal Power, Transfer Power, and Wall Switch.
2. Wire relay according to wiring diagram.
3. Energize Transfer Power. Emergency Light should illuminate.
4. Energize Normal Power. Emergency Light will turn OFF.
5. Turn ON Wall Switch. Emergency Light should illuminate.

Field Inspection

1. Ensure Normal Power and Transfer Power are energized.
2. Turn OFF Wall Switch. Light will turn OFF.
3. Red LED and Yellow LED will be illuminated.
4. Turn OFF Normal Power. Red LED will turn OFF. Emergency Light will illuminate.

Use of Normal Light as Emergency Light

Our Emergency Bypass / Shunt Relays are UL924 Listed and suitable for shunting around wall switches in order to turn on emergency lighting in the event of loss of normal utility power.

When the Emergency Light is needed as a Normal Light as well, this application can be applied using this specific relay.

When Normal Power is present, the ESR relay coil is activated and the emergency panel is fed from Normal Power. The lighting load can be switched on/off using the existing wall switch.
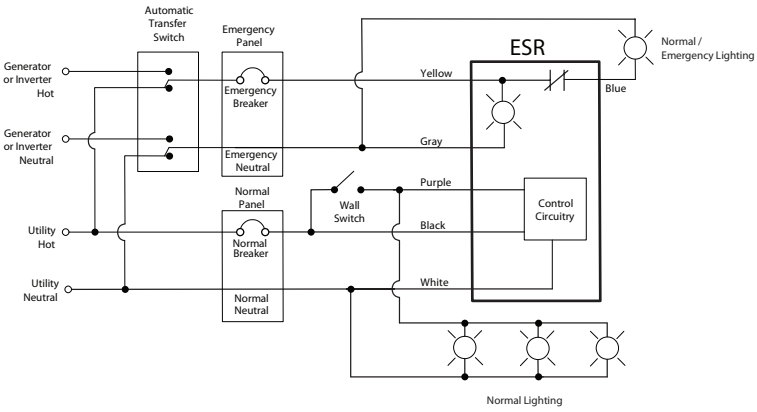
When Normal Power drops out, the ESR coil is deactivated and N/C contact falls closed. The Automatic Transfer Switch changes over to backup (generator) power, and the Emergency Light remains illuminated, regardless of the position of the existing wall switch, while the Normal Lighting is off.